CUB PLUS

Extra stable, open base construction; 5 heavy-duty lockable castors for easy mobility and the worksurface is fitted with flush mounted hinges to prevent snagging

Super compact and as popular as ever

The latest version of this cheeky little cabinet is now made with extra depth, which means you now have an increased worksurface, greater legroom and enhanced stability.

Delivered fully assembled

The traditionally designed Cub Plus is perfect for compact sewing areas. It's fitted with our 3-step Air-Lifter, removable transparent door storage for your accessories, and permanent housing for your sewing machine. The benefits of a full-size sewing cabinet, with the luxury of an extra small size.

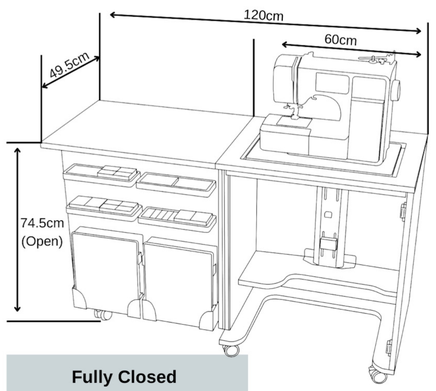

Fully Closed
W 60cm (23 ¾")
D 49.5cm (19 ½")
H 76cm 30")

Need a chair? See pg.38-39 for more information

Now fitted with our new flush inset style template (size 1972). This cabinet has our standard size opening which is capable of taking many types of sewing machines, but not all. If your sewing machine is one of the larger domestic machines you may need to look from the Gemini up. Give us a call if you'd like to check for sure if your sewing machine fits this model.

Inset not included - please see pg.42 for information on how to order one

Available in:

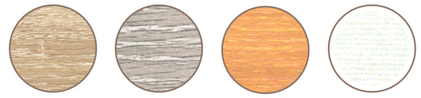

Weathered Oak | American Grey Oak | Beech | White

For more delivery info please see pg.43 for details.